ITEM NO.	PART NO.	QTY.	DESCRIPTION	PACKED BY
1	TSA1127	1	3 SEATER REAR FACING ASSEMBLY - WITH SEAT BELTS	
2	TS1133	1	CRASH FRAME SUPPORT BEAM - PASSENGER SIDE	
3	TS1134	1	CRASH FRAME SUPPORT BEAM - DRIVER SIDE	
4	TS1132-03	2	SADDLE BRACKET	
5	TS1132-02	4	26.9x2.6 CHS - 40 LONG	
6	TS1132-04	2	BACKING PLATE WELDMENT	
7	10X90M 88 ZPSS	1	M10 x 90mm HEX HEAD SET SCREW	
8	10X70M 88 ZPSS	4	M10 x 70mm HEX HEAD SET SCREW	
9	10X50M 88 ZPSS	4	M10 x 50mm HEX HEAD SET SCREW	
10	10M SW	4	M10 SPRING WASHER	
11	10M ZPW	18	M10 FLAT WASHER	
12	10M NYLN	5	M10 NYLOC NUT	
13	8X20M BSS	2	M8 x 20mm BUTTON HEAD SET SCREW	
14	TS533A	4	SPACER Ø22.2 x 12.6mm - BLACK	
15	TS371	4	M10 UNDERFLOOR PLATE 95 X 40	
16	-	1	TOYOTA HIACE HANDLE	
17	-	1	FITTING INSTRUCTIONS	

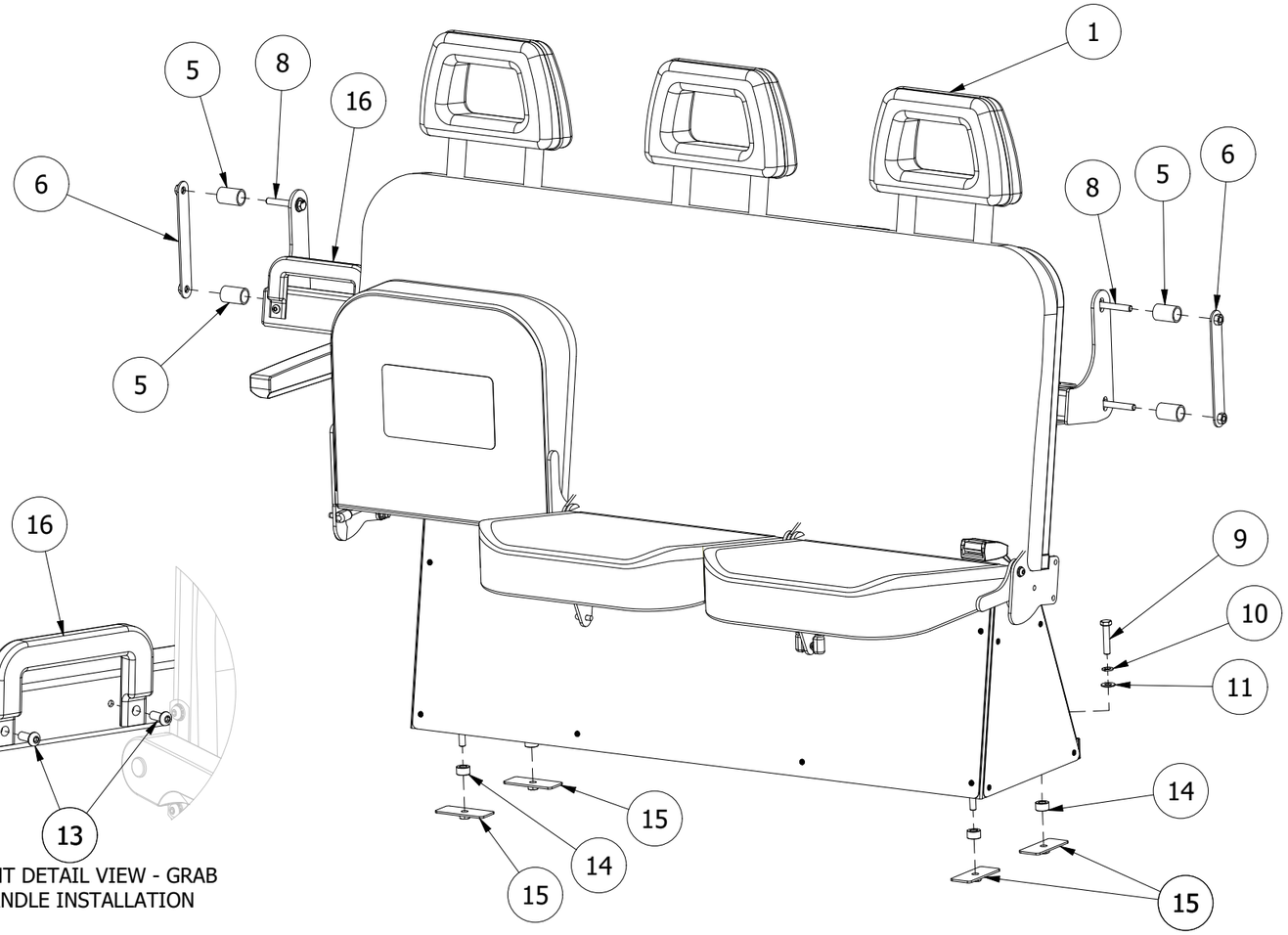

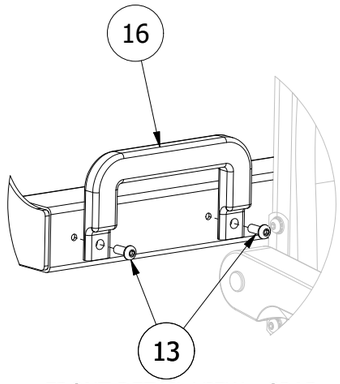

FRONT DETAIL VIEW - GRAB HANDLE INSTALLATION

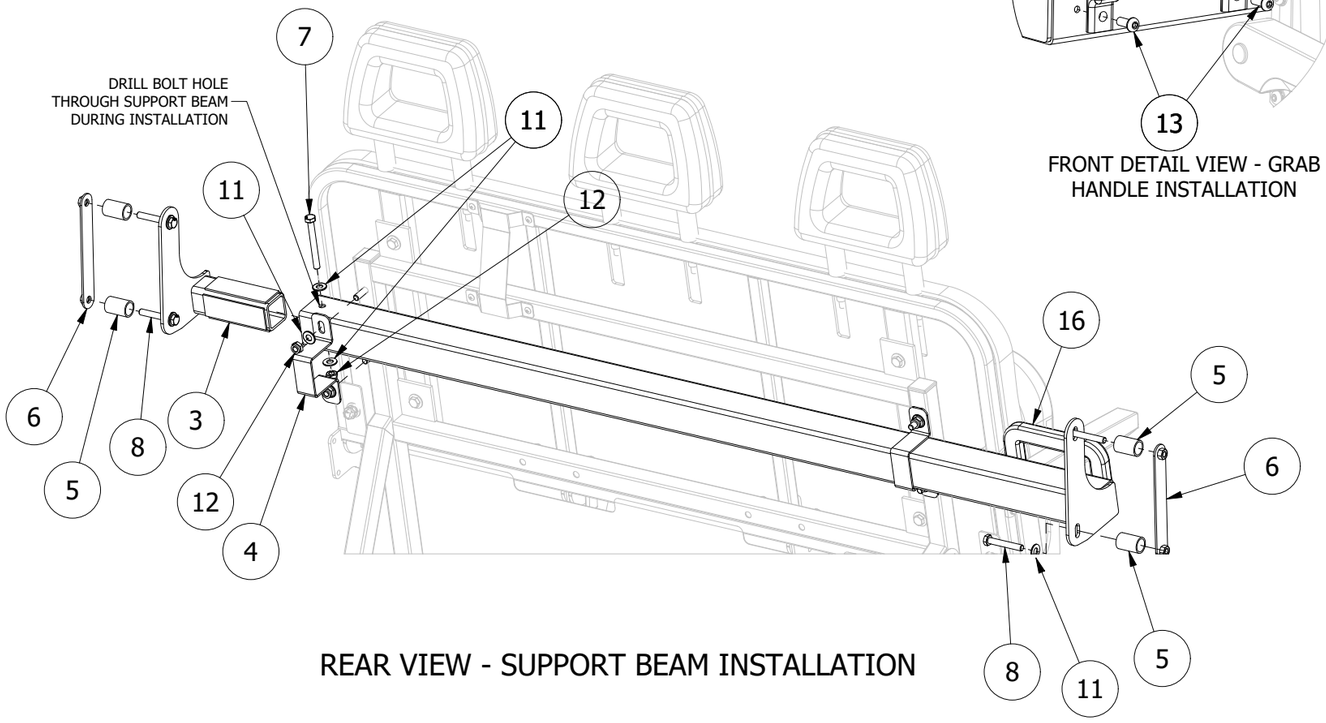

REAR VIEW - SUPPORT BEAM INSTALLATION

INSTALLATION NOTES:

1. Remove OEM handrail. Pull back passenger side plastic trim and remove trim locating clips.
2. Pilot drill through from inside, using clip holes as location guides.
3. Holesaw clearance hole using pilot holes as locators.
4. Drill out clip holes to 11mm.
5. Pull back driver side trim and repeat drilling process, as per passenger side.
6. Bolt driver side of cross bar into place first. The backing plate is inserted into position through the cutout at the bottom of the B-pillar.
7. Remove electrical contact in sliding door. The passenger side backing plate is inserted into position through this B-pillar hole.
8. Bolt the rest of the cross beam into position. After torqueing all mounting bolts, site drill for the M10x90mm bolt to join the 2 halves.
10. Position the seat assembly approximately 40mm from the vehicle wall to edge of the seat base foam. Tighten the mounting clamps.
11. Drill 4 x holes in the vehicle floor, using seat frame as a guide and secure using the supplied bolts and plates.
12. Reattach the OEM handrail (removed at step 1) to the support beam near the sliding door using the supplied bolts.

REV	DESCRIPTION	BY	DATE
2	ADDED REAR BELT COVER BRACKET	GJH	29/04/2020
0	INITIAL RELEASE	GJH	3/02/2020

WEIGHT: N/A
DWG SIZE: A3
TOLERANCES: LINEAR ±1mm ANGULAR ±0.5
DIMENSIONS ARE IN MILLIMETERS UNLESS OTHERWISE SPECIFIED
DO NOT SCALE DRAWING

PROPRIETARY AND CONFIDENTIAL
THE INFORMATION CONTAINED IN THIS DRAWING IS THE SOLE PROPERTY OF TECHSAFE. ANY REPRODUCTION IN PART OR AS A WHOLE WITHOUT THE WRITTEN PERMISSION OF TECHSAFE IS PROHIBITED.

	NAME	DATE
DRAWN	GJH	3/02/2020
CHECKED		
ENG APPR.		
MFG APPR		

TECHSAFE
1-3 Averial Close
HERVEY BAY QLD 4655
PH 07 4128 3337
FAX 07 4128 2060
email: technical@techsafeseating.com.au
web: techsafeseating.com.au

PROJECT: H300 (2019+) HIACE COMMUTER
TITLE: REAR FACING TRIPLE SEAT INSTALLATION
DRAWING No.: PK137
REV: 2
DRAWING TYPE: PACKING KIT
SHEET NO.: 1 of 1